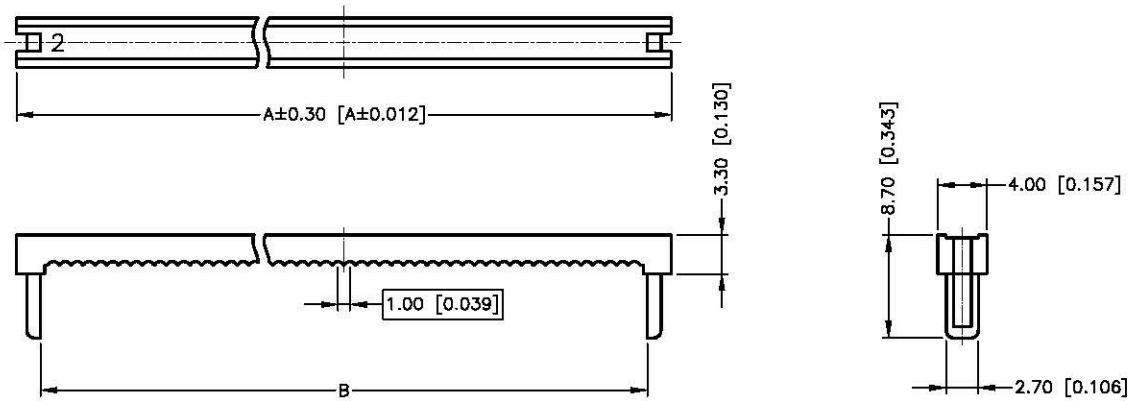

1.MATERIALS AND FINISH
1.1 HOUSING MATERIALS:
THERMOPLASTIC.
1.2 CONTACTS:
COPPER ALLOY.
UNDER PLATING NICKEL.
CONTACT AREA PLATING G/F.
2.SPECIFICATIONS
2.1 CURRENT RATING:
0.5A MAX.
2.2 INSULATION RESISTANCE:
1000MΩ MIN.
2.3 DIELECTRIC WITHSTANDING VOLTAGE:
300V (r.m.s) AC FOR 1 MINUTE.
2.4 CONTACT RESISTANCE:
mΩ30 MAX.
2.5 OPERATING TEMPERATURE:
+85℃～−40℃.

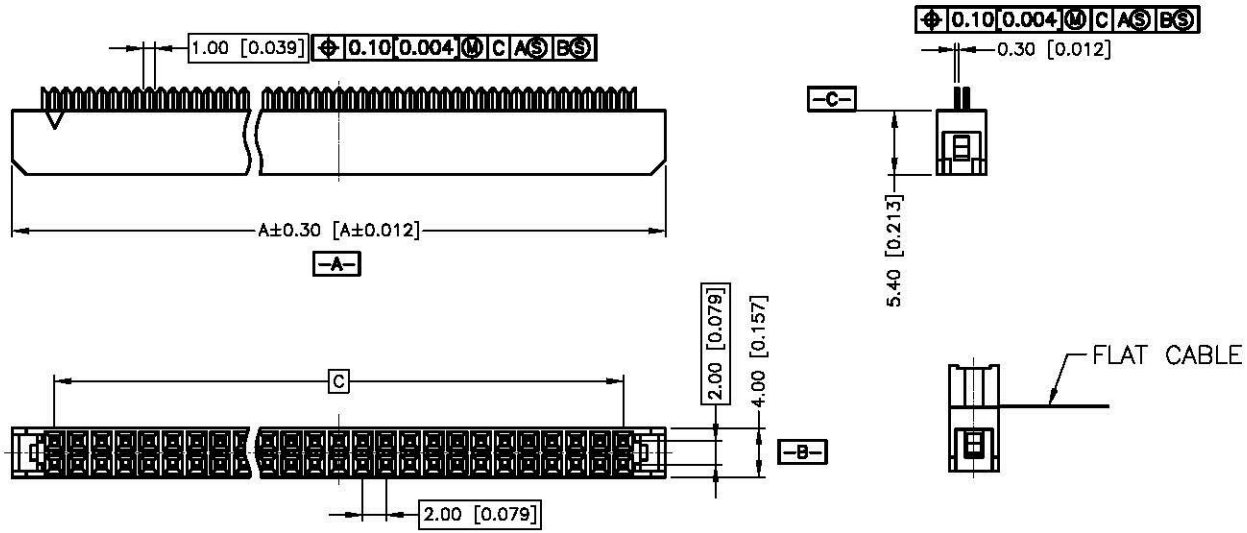

MF−C2X−xxx−LF
LEADFREE
RoHS Compliant

Number Of Position	A	B	C
68	73.20[2.882]	69.10[2.720]	66.00[2.598]
64	69.20[2.724]	65.10[2.563]	62.00[2.441]
60	65.20[2.567]	61.10[2.406]	58.00[2.283]
50	55.20[2.173]	51.10[2.012]	48.00[1.890]
44	49.20[1.937]	45.10[1.776]	42.00[1.654]
40	45.20[1.780]	41.10[1.618]	38.00[1.496]
36	41.20[1.622]	37.10[1.461]	34.00[1.339]
34	39.20[1.543]	35.10[1.382]	32.00[1.260]
30	35.20[1.386]	31.10[1.224]	28.00[1.102]
26	31.20[1.228]	27.10[1.067]	24.00[0.945]
24	29.20[1.150]	25.10[0.988]	22.00[0.866]
22	27.20[1.071]	23.10[0.909]	20.00[0.787]
20	25.20[0.992]	21.10[0.831]	18.00[0.709]
18	23.20[0.913]	19.10[0.752]	16.00[0.630]
16	21.20[0.835]	17.10[0.673]	14.00[0.551]
14	19.20[0.756]	15.10[0.594]	12.00[0.472]
12	17.20[0.677]	13.10[0.516]	10.00[0.394]
10	15.20[0.598]	11.10[0.437]	8.00[0.315]
6	11.20[0.411]	7.10[0.280]	4.00[0.157]
	DIMENSIONS		

All Connectors
www.allconnectors.de
Tel.: 0049 711 7000503
70794 Filderstadt - Germany
info@allconnectors.de
Fax: 0049 711 7000504
Kettemerstr. 25

PART NO. MF-C2X-xxx			
DWG NO. MF-C2X-xxx	APPROVED BY CY	TOLERANCES ARE	DESCRIP TION: IDC SOCKET 2.00PH KIT BLACK (WITHOUT NOSE)
FILE NO.	DRAWING BY	.X ±0.3 .XX ±0.2 .XXX AWG	
UNIT / mm SCALE 1:1	PROJECTION		AREA / REVISIONS / HK / DATE