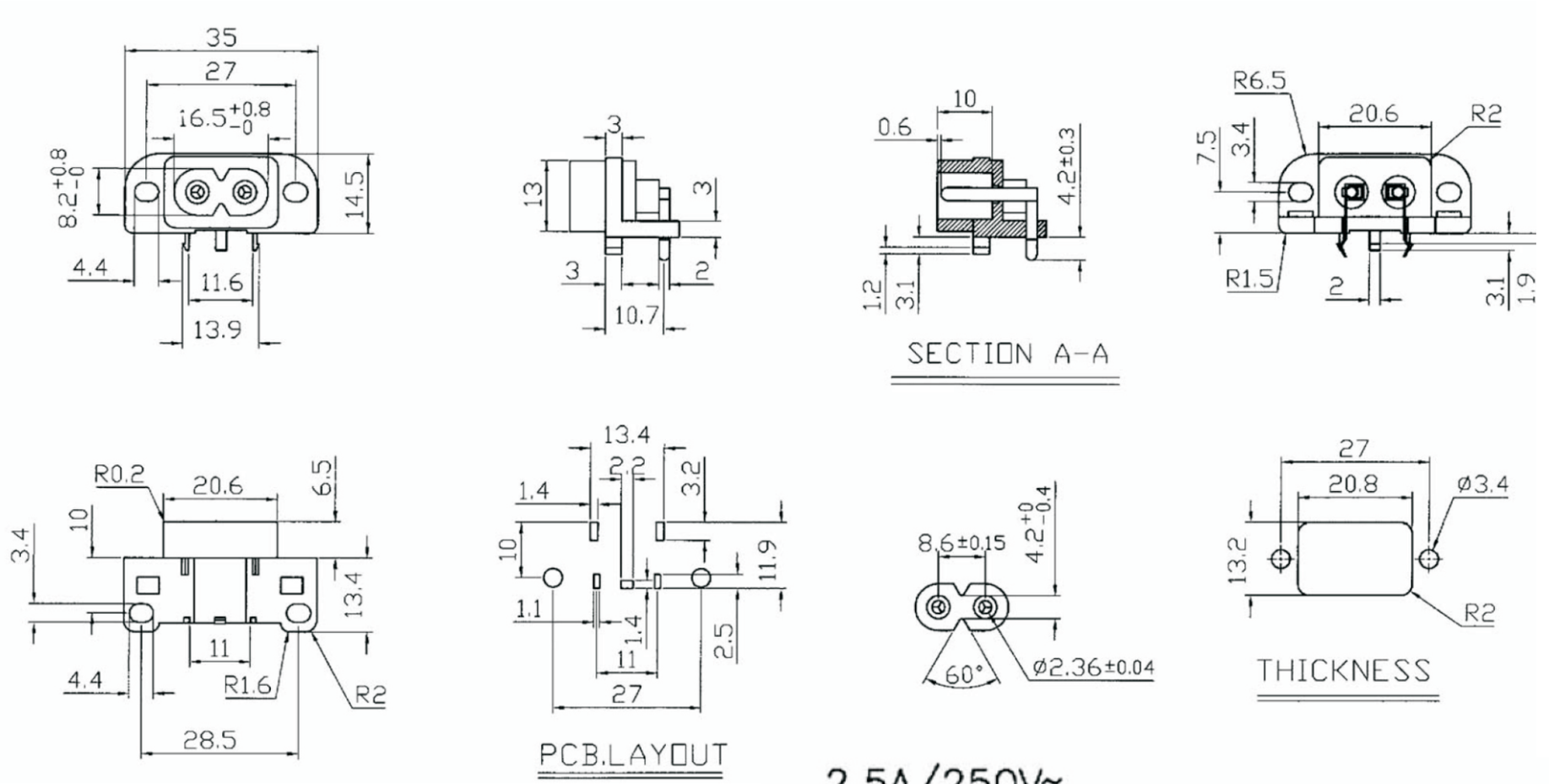

2.5A/250V~

1. SOLDERING: PIN PHOSPHOR BRONZE 0.3X2T TIN PLATING
2. CONTACT: PIN PHOSPHOR BRONZE ø2.36 TIN PLATING
3. BODY INSULATOR: NYLON 66 UL94V-0

ACC-PRPEB-02-LF
LEADFREE

RoHS Compliant

	PART NO. ACC-PRPEB-02							
	DWG NO. ACC-PRPEB-02	CHECKED BY CY	TOLERANCES ARE .X ± 0.2 .XX ± .XXX ± AWG	DESCRIP TION:				
All Connectors	FILE NO.	DRAWING BY						
www.allconnectors.eu | info@allconnectors.eu Tel. +49 (0)711 / 358 110 20 | Fax +49 (0)711 / 358 110 25	UNIT / mm	SCALE 1 : 1	PROJECTION	AREA	REVISIONS	HK	DATE	