* Material : Brass

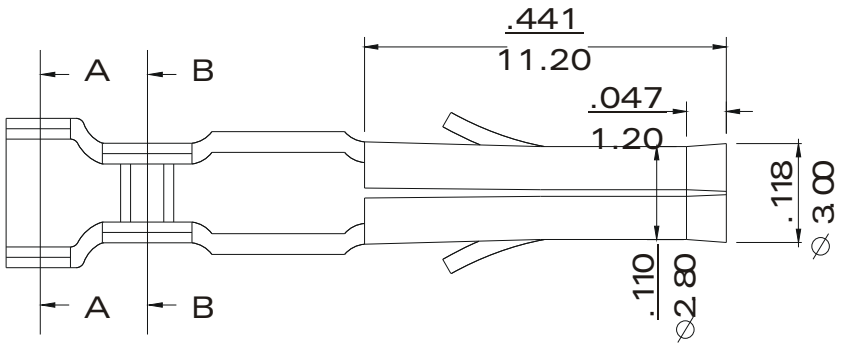

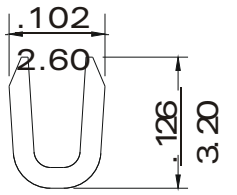

B-B

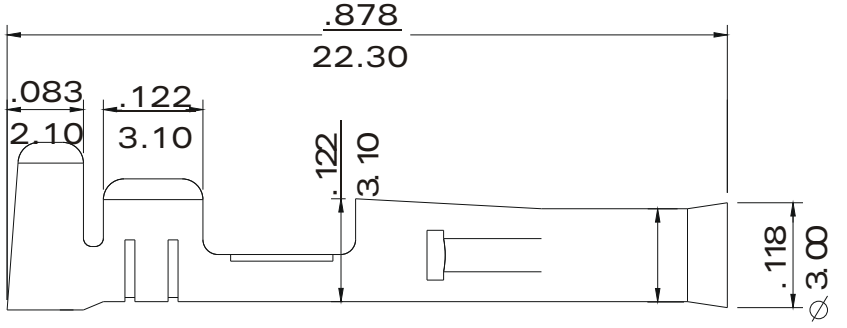

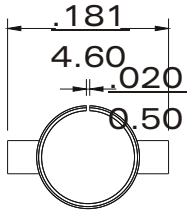

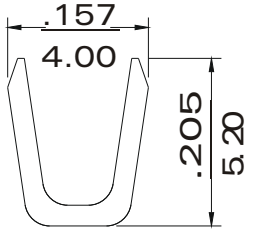

A-A

inch
mm

Part No.	Wire Range	Package
PW-F-14	AWG#14-#20	4000PCS/REEL
PW-F-20	AWG#20-#24	5000PCS/REEL

AllConnectors www.allconnectors.eu | info@allconnectors.eu Tel. +49 (0)711 / 358 110 20 | Fax +49 (0)711 / 358 110 25	PART NO. **PW-F-xx**				DESCRIP TION:		
	DWG NO. **PW-F-xx**	CHECKED BY CY	TOLERANCES ARE .X ± 0.2 .XX ± .XXX ± AWG				
	FILE NO.	DRAWING BY					
	UNIT / mm	SCALE 1 : 1	PROJECTION		AREA	REVISIONS	HK / DATE