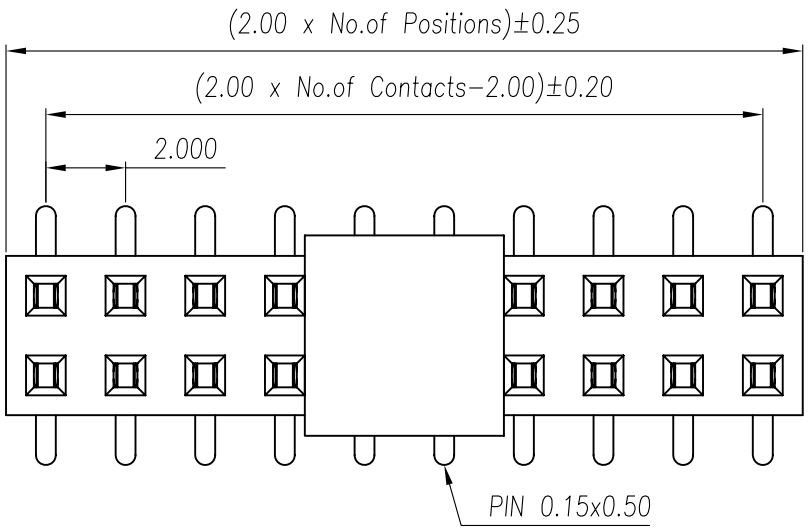

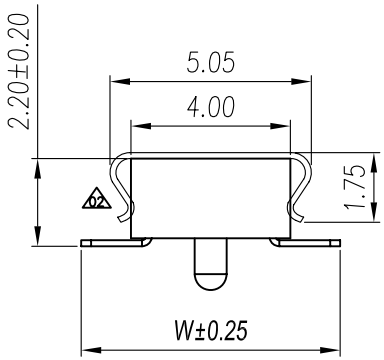

Specifications

Current Rating: 3Amp
Insulation Resistance: 1000MΩ Min.
Dielectric Withstanding: 500V AC
Contact Resistance: 20mΩ Max.
Operating Temperature:−40°C to +105°C

Materials

Contact Material: Phosphor Bronze
Insulation Material: Polyester,UL 94V−0
Nylon 6T
All materials must be GP materials

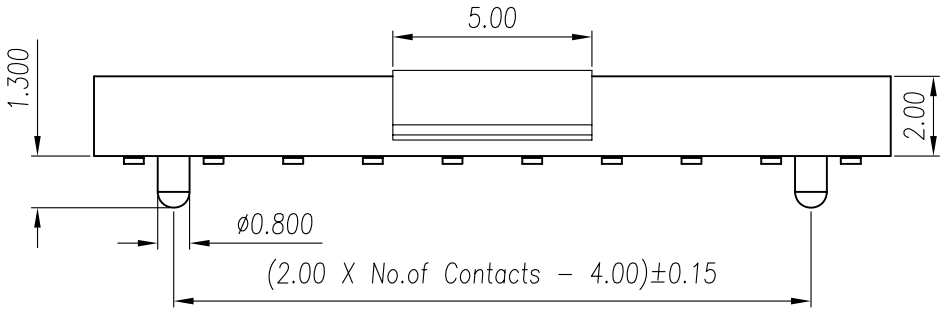

RECOMMENDED P.C.B LAYOUT

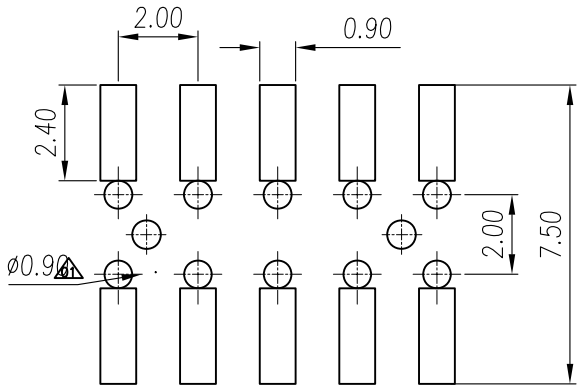

Ordering Information

HFLDSV2 − XX XX XXX T P X

- XX: No. of Pins Per Row 04-40
- XX: Standard Plating 01=Gold Flash 02=Gold 3U" 11=Tin XX=Select Plating
- XXX: Pin Length 001=6.5 XXX=Select W
- T: Material L=LCP T=NL6T
- P: Post P=With Post W=Without Post
- X: Packing TR=Tape+Rell T=Tube

GENERAL TOLERANCE	ANGLE TOLERANCE	DESIGN DATE
X. ± .X ±0.38 .XX ±0.25 .XXX ±0.13	X° ±5° .X° ±2° .XX° ±1° .XXX° ±0.5°	Andy2005. 08. 12
		CHECK DATE
UNIT:mm	SCALE 1:1	APPRO. DATE
A4	SHEET: 1 of 1	

All Connectors
www.allconnectors.eu | info@allconnectors.eu
Tel. +49 (0)711 / 358 110 20 | Fax +49 (0)711 / 358 110 25

FILE NAME (品名)	2. 0MM Female Header SMT TYPE
PART NO (料号)	HFLDSV2−XXXXXXXTPX
DRAWING NO.(图号)	HFLDSV2−05 REV.A0