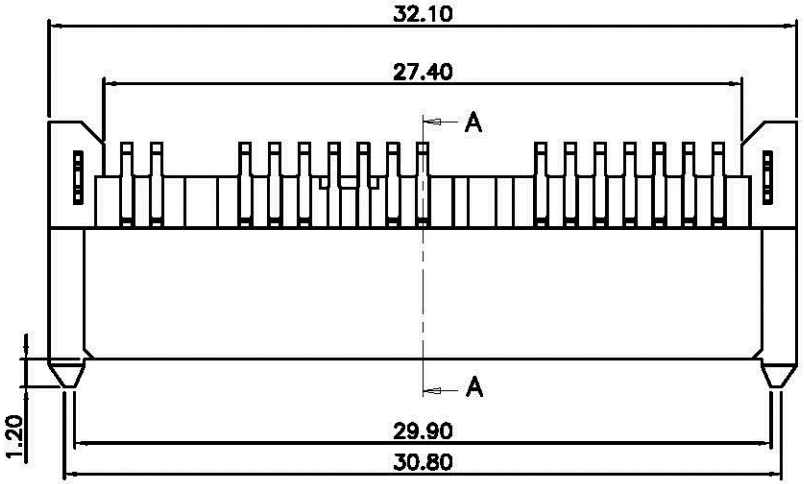

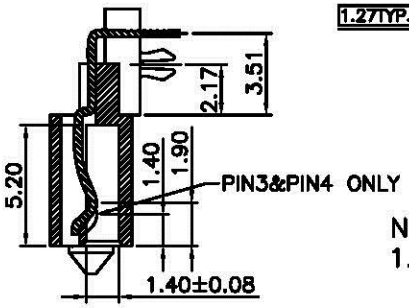

SECTION A–A

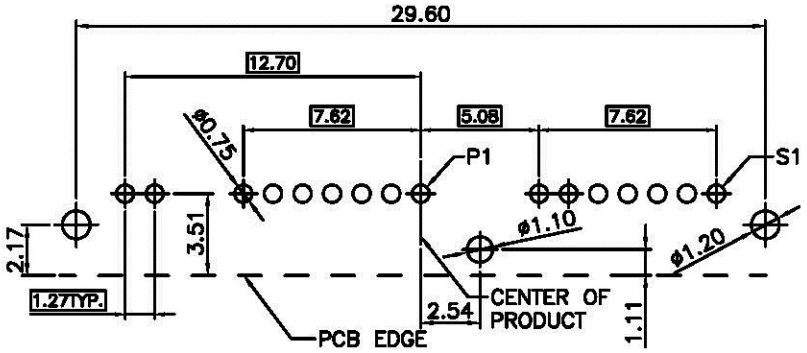

RECOMMENDED PCB LAYOUT
PCB THIKNESS=1.00mm

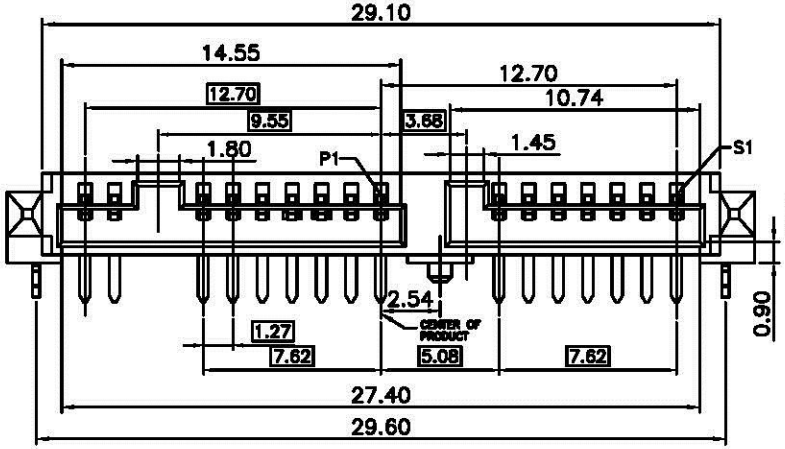

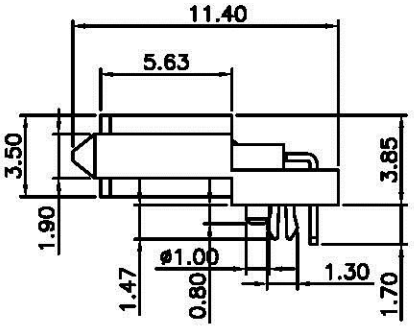

NOTE:

1.MATERIAL :
- BASE : HIGH TEMPERATURE THERMOPLASTIC UL94V–0,
- TERMINAL:COPPER ALLOY,THICKNESS = 0.30 mm
- FORKLOCK:BRASS THICKNESS = 0.30 mm

2,PLATING:
- CONTACT:GOLD OVER 50u" MIN NICKEL UNDERPLATE
- SOLDER TAIL:150u"MIN MISTY TIN 50u" MIN NICKEL UNDERPLATE
- GOLD SPECIFICATION:SEE TABLE

3.ELECTRONICAL SPECIFICATION:
- CURRENT RATING: 1.5 AMPERE PER CONTACT
- CONTACT RESISTANCE: 30 MILLIOHMS MAX.
- INSULATION RESISTANCE: 1000 MEGOHMS MIN.
- DIELECTRIC WITHSTANDING VOLTAGE: 500 VAC.
- OPERATING TEMPERATURE: –40°C~+85°C

SATA–SRA–2+7+7–LF
LEADFREE

RoHS Compliant

AllConnectors
www.allconnectors.de
Tel.: 0049 711 7009003
70794 Filderstadt - Germany
info@allconnectors.de
Fax: 0049 711 7009004
Kelterstrasse 25

PART NO. SATA-SRA-2+7+7							
DWG NO. SATA-SRA-2+7+7	CHECKED BY CY	TOLERANCES ARE	DESCRIP TION:	USATA 16PIN母頭DIP			
FILE NO.	DRAWING BY	.X ± 0.2 .XX ± .XXX ± AWG					
UNIT / mm	SCALE 1 : 1	PROJECTION	AREA	REVISIONS	HK	DATE	