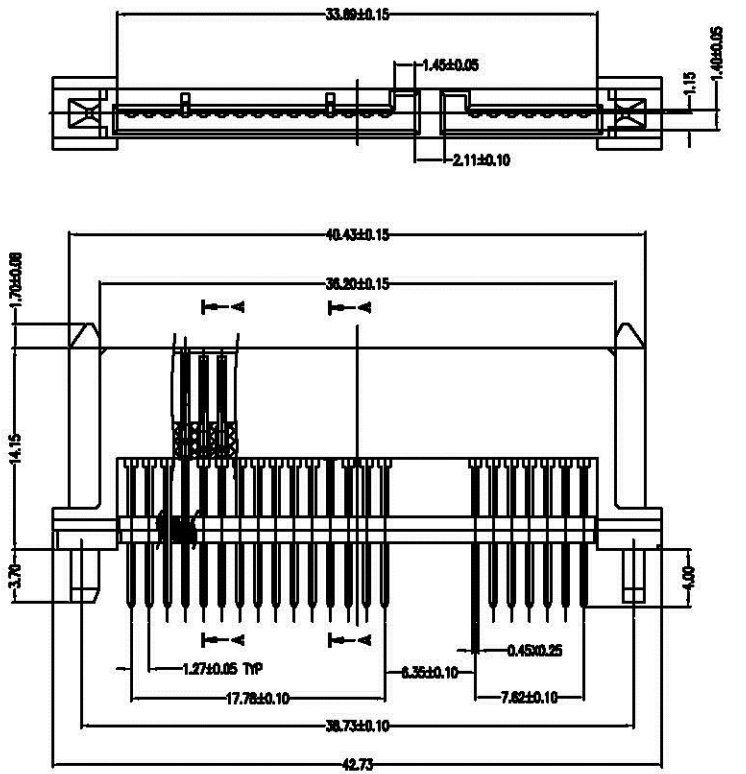


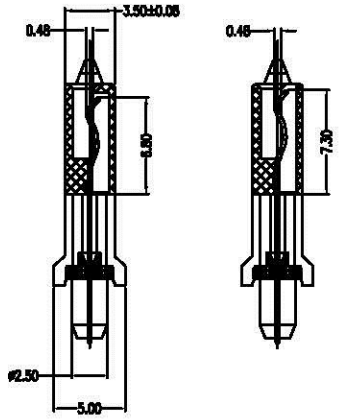


SECT A–A

SECT B–B

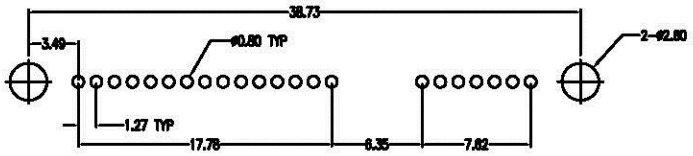


P.C.B LAYOUT

# NOTES:

## *Material

Housing: LCP, UL 94V–0 rated; Color: Black.
Contact: Phosphor Bronze
Plating: Gold Plating over Nickel on contact area;
Tin plating on Solder Tail.

## *Electrical Specification

Operation Voltage: 100 VAC max.
Current Rating: 1.5 Ampere per contact
Contact Resistance: 30 Milliohms max.
Insulation Resistance: 1000 Megohms min.
Dielectric Withstanding Voltage: 500 VAC

## *Environmental

Operating Temperature: –55°C to +125°C

SATA–SD14P–7+15–LF
LEADFREE

RoHS Compliant

All Connectors
www.allconnectors.de
Tel.: 0049 711 7009500
70794 Filderstadt Germany
info@allconnectors.de
Fax: 0049 711 7009504
Kettemerstr. 25

| | | | | | | | |
|---|---|---|---|---|---|---|---|
| PART NO. SATA-SD14P-7+15 | | | | | | | |
| DWG NO. SATA-SD14P-7+15 | CHECKED BY CY | TOLERANCES ARE .X ± 0.2 .XX ± .XXX ± AWG | DESCRIP TION: | SATA 7+15P Higher DIP Type Female (High: 15.85mm) | | | |
| FILE NO. | DRAWING BY | | | | | | |
| UNIT / mm | SCALE 1 : 1 | PROJECTION | AREA | REVISIONS | HK | DATE | |