SCHEMATIC	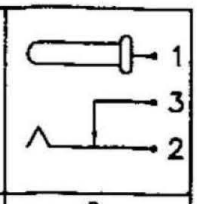
MODEL NO	C

SPECIFICATIONS:

Contact Resistance	: 30mΩ max
Current Rating	: Max 2.0A , 16V DC
Insulation Resistance	: 100MΩ min. at DC 500V
Dielectric Withstanding Voltage	: AC 500V for one minute

Remark: ▲: The Most Important Dimension

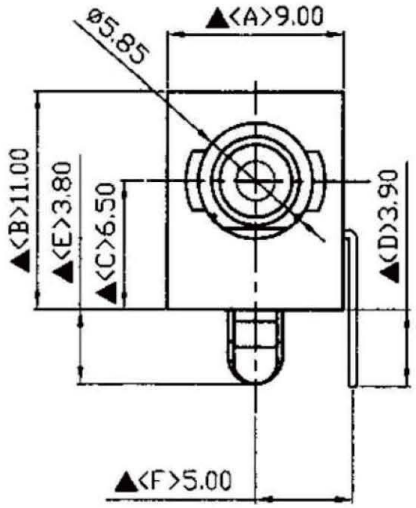

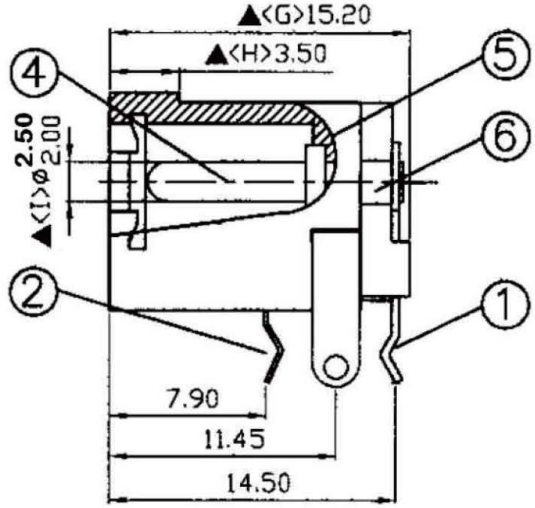

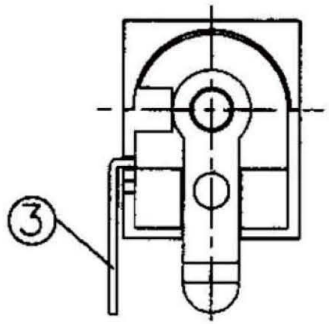

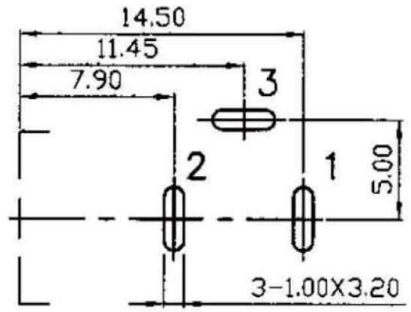

Pin Hole Layout
(Jack Bottom View)

NO.	Description	Material	Q'TY	Finish
6.	Cover	PBT+30% Fibre Glass	1	Black Color
5.	Housing	PBT+30% Fibre Glass	1	Black Color
4.	Pin(2.0/2.5ø)	Copper	1	Nickel Plated
3.	Break Terminal	0.4T Brass	1	Silver Plated
2.	Sleeve Spring	0.2T Phosphor Bronze	1	Silver Plated
1.	Pin Terminal	0.4T Brass	1	Silver Plated

RoHS Compliant

AllConnectors
www.allconnectors.de
info@allconnectors.de
Tel.: 0049 711 7009503
Fax: 0049 711 7009504
70794 Filderstadt - Germany
Kettemerstr. 25

DRAWING BY	CY
CHECKED BY	GENIUS
UNIT / mm	SCALE 1 : 1
DATE	
SIZE A4	PPOJECTION

TOLERANCES ARE
X. ±
.X ±
.XX ±
.XXX ±
ANG ±

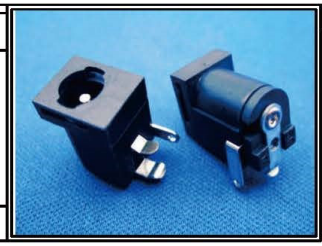

ORDER INFORMATION

DCJ-RLK-xx-LF

- SERIES
- DIP 90°
- LOCK
- 20:2.0Ø 25:2.5Ø
- LEADFREE

DESCRIPTION: