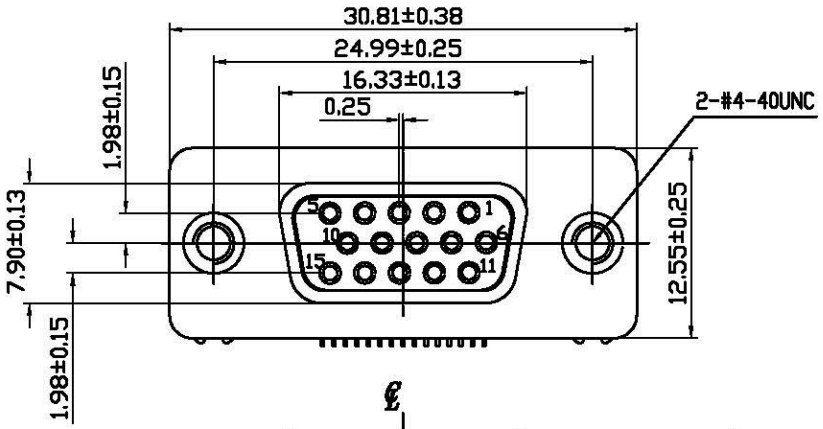

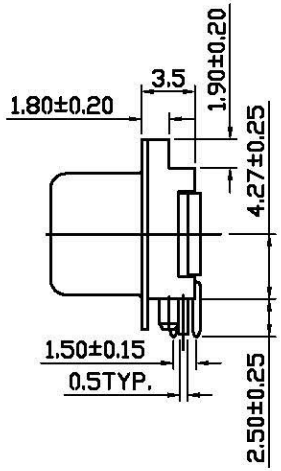

SPECIFICATIONS

ELECTRICAL CHARACERISTICS:

Contact Current Rating:3 Amperes.
Dielectric Withstanding Voltage: AC 1000/60sec.r.m.s.
Insulation Resistance:5000 Medohms Minimum.at DC 500V.
Contact Resistaance:25 Milliohms Maximum.
Operating Temperature:−55°C to+105°C.

MECHANICAL CHARACTERISTICS:

Contact Insertion Force:341 g.Maximum.
Contact Seperation Force:21 g.Maximum.

MATERIALS:

Contacts:Brass.
Insulator: PBT or HIGH TEMP THERMAL PLASTIC 94V−0 Rated.
Shell:Cold Roller Steel.

FINISHES:

Contact:Gold Flash.
Shell:Nickel Plated.

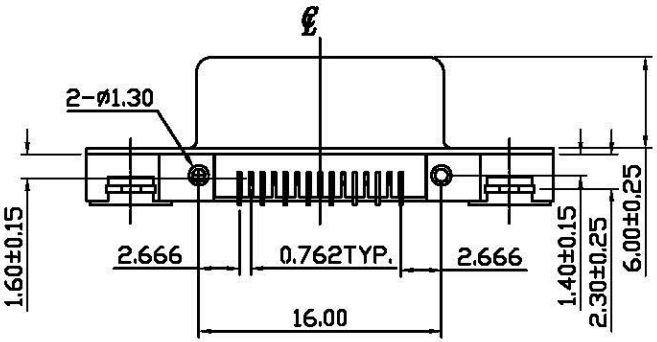

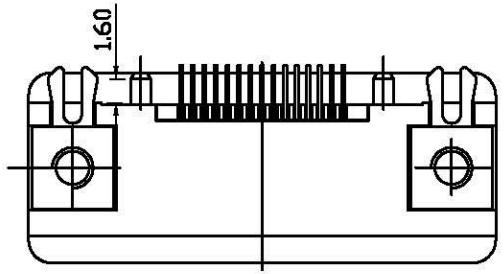

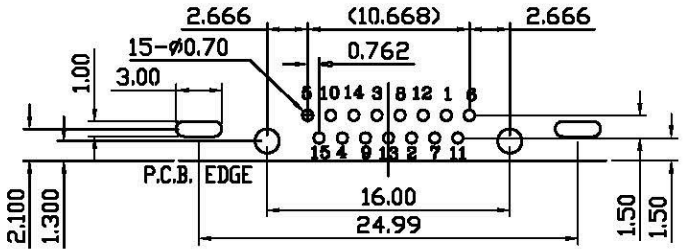

RECOMMENDED P.C.B. LAYOUT

All Connectors www.allconnectors.de info@allconnectors.de 70794 Filderstadt Germany	PART NO. HDR15-SNRV-15					
	DWG NO. HDR15-SNRV-15	CHECKED BY CY	TOLERANCES ARE .X± 0.25 .XX± 0.15 .XXX± AWG	DESCRIP TION:	D−SUB 15 FEMALE HIGH DENSITY CONN.SLIM DIP TYPE RIGH ANGLE 1.60mm FOOTPRINT,1.50mm ROW DISTANCE	
	FILE NO.	DRAWING BY				
	UNIT / mm	SCALE 1:1	PROJECTION	AREA	REVISIONS HK	DATE