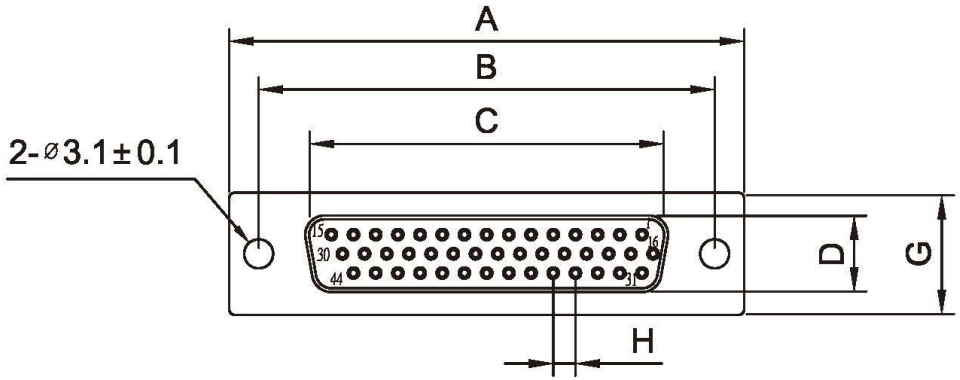

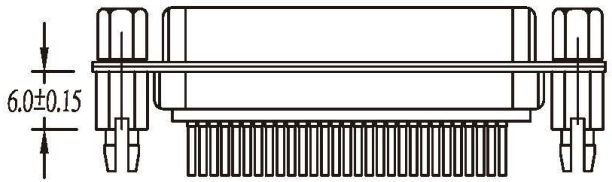

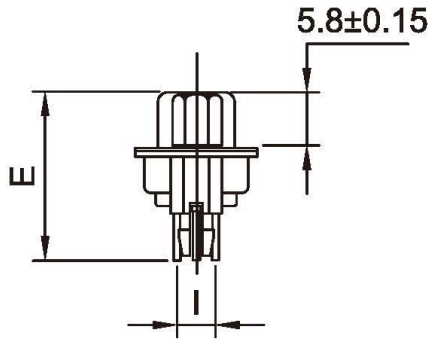

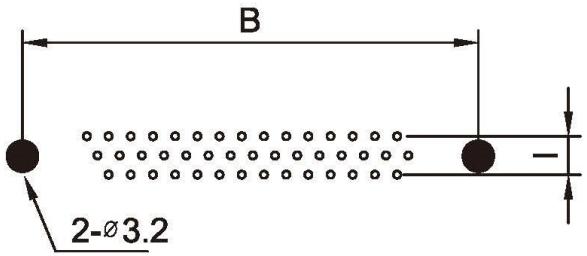

PC BOARD LAYOUT

Note:

1.Material:

1.1 Insulator: High temperature thermoplastic with g.f,UL94v-0

1.2 Contact: Copper alloy,t=0.20mm

1.3 Shell: Spcc,t=0.30mm

2.Specification:

2.1 Current rating: 1 A Max.

2.2 Dielectric withstanding voltage: 750 V(ac) for 1 min.

2.3 Contact resistance: 30 mΩ Max.

2.4 Insulation resistance: 1000 MΩ Min.

2.5 Total mating force: 8.0 Kgf Max.

2.6 Total unmating force: 1.5 Kgf Min.

2.7 Temperature range: -55°C~85°C

PART NO	A±0.25	B±0.20	C±0.20	D±0.20	E±0.30	F±0.25	G±0.25	H±0.05	I ±0.20
HDD-SGZJ-15	30.81	24.99	16.33	7.9	16.2		12.55	2.29	3.96
HDD-SGZJ-26	39.25	33.32	24.66	7.9	16.2		12.55	2.29	3.96
HDD-SGZJ-44	53.04	47.04	38.38	7.9	16.2		12.55	2.29	3.96
HDD-SGZJ-62	69.50	63.50	54.84	7.9	16.2		12.55	2.41	3.96

RoHS Compliant

All Connectors
www.allconnectors.de
Tel.: 0049 711 7009503
70794 Filderstadt - Germany
info@allconnectors.de
Fax: 0049 711 7009504
Kettemerstr. 25

DRAWING BY CY
CHECKED BY GENIUS
UNIT / mm | SCALE 1 : 1
DATE
SIZE A4 | PPOJECTION

TOLERANCES ARE
X. ±
.X ±
.XX ±
.XXX ±
ANG ±

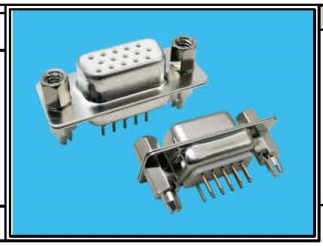

ORDER INFORMATION

HDD-SGZJ-xx-LF

SERIES
FEMALE
FULL GOLD
CLIP
JACKSCRW
15~62WAY
LEADFREE

DESCRIPTION: D-SUB HDD FEMALE (鉚魚叉)