THE INFORMATION CONTAINED IN THIS DOCUMENT IS PROPRIETARY TO Y-S ELECTRONIC, ANY REPORDUCTION IN PART OR WHOLE WITHOUT PRIOR WRITTEN APPROVAL OR AUTHORIZATION OF Y-S ELECTRONIC IS STRICTLY PROHIBITED.

REV.	DESCRIPTION	ECN NO.	DWN.	CHK.	APVD.	DATE

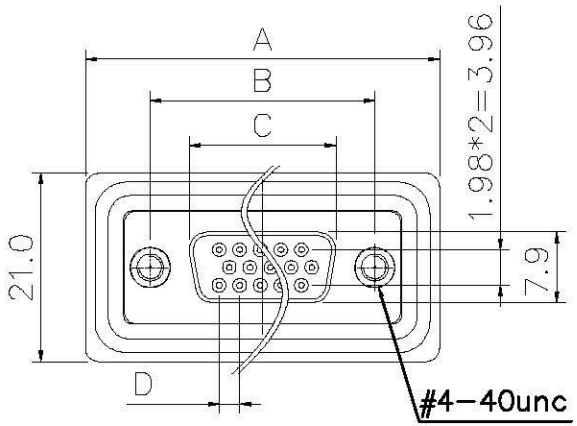

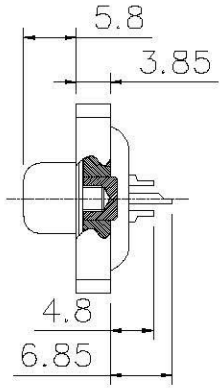

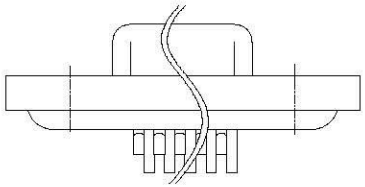

Product Specification
Insulator : Glass-Filled Thermoplastic PBT
BLACK,UL94V-0
Contact : Brass
Shell : SPCC, Nickel Plated
Clinch Nut : Brass, Nickel Plated
Operating Temperature:-55℃ to +105℃

Electrical
Contact Resistance :
20 milliohms Max at 1 AMP DC.
Insulation Resistance :
1000 megohms at 500 VDC
Dielectric Withstanding Voltage :
1000 V RMS at 60Hz for 1 minute
Current Rating : 5 AMP
Volatge Rating : 250 V RMS at 60Hz

DIMENSION TABLE

POSITIONS	A±0.15	B±0.15	C±0.15	D±0.15
15	39.40	24.99	16.33	2.29
26	48.70	33.30	24.70	2.29
44	61.65	47.04	38.40	2.29
62	78.00	63.50	54.80	2.41

DO NOT SCALE DRAWING

DIMENSIONS:
☐ mm [INCH] ☐ INCH [mm] ☒ mm ONLY

UNLESS OTHERWISE SPECIFIED, GENERAL TOLERANCE:
DECIMALS: X. ±0.38 [0.015]; .X ±0.25 [0.010]; .XX ±0.13 [0.005]
ANGLES: X° ±3°; .X° ±1.0°

MATERIAL:

FINISH:

CAD GENERATED DRAWING, DO NOT MANUALLY UPDATE

DRAWN BY AND DATE
JACK CHEN 2010-06-08

CHECKED BY AND DATE
JACK CHEN 2010-06-08

APPROVED BY AND DATE
FRANKY CHEN 2010-06-08

THIRD ANGLE PROJECTION

SCALE: 1 : 1

SIZE: A3

All Connectors
www.allconnectors.de
Tel.: 0040 711 7000503
info@allconnectors.de
Fax: 0040 711 7000504

TITLE
D-Sub Type Waterproof(High Density)

DRAWING NO.
231a-XX2X11

REV
B

FILE NO.:

SHEET 1 OF 1

THE INFORMATION CONTAINED IN THIS DOCUMENT IS PROPRIETARY TO Y-S ELECTRONIC, ANY REPORDUCTION IN PART OR WHOLE WITHOUT PRIOR WRITTEN APPROVAL OR AUTHORIZATION OF Y-S ELECTRONIC IS STRICTLY PROHIBITED.

REV.	DESCRIPTION	ECN NO.	DWN.	CHK.	APVD.	DATE

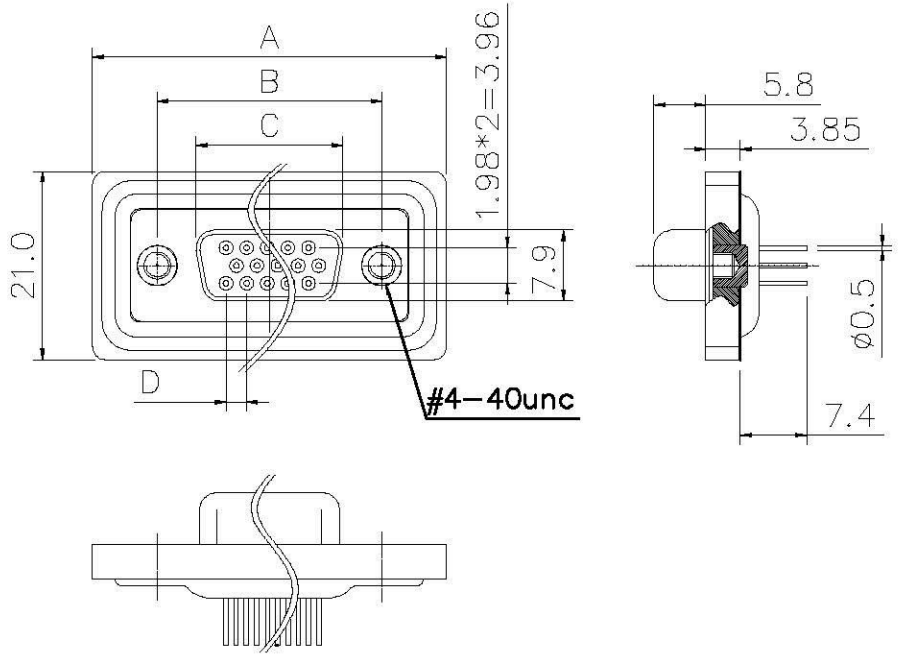

Product Specification
Insulator : Glass-Filled Thermoplastic PBT
BLACK,UL94V-0
Contact : Brass
Shell : SPCC, Nickel Plated
Clinch Nut : Brass, Nickel Plated
Operating Temperature:-55℃ to +105℃

Electrical
Contact Resistance :
20 milliohms Max at 1 AMP DC.
Insulation Resistance :
1000 megohms at 500 VDC
Dielectric Withstanding Voltage :
1000 V RMS at 60Hz for 1 minute
Current Rating : 5 AMP
Volatge Rating : 250 V RMS at 60Hz

DO NOT SCALE DRAWING

Dimensions

POSITIONS	A±0.15	B±0.15	C±0.15	D±0.15
15	39.40	24.99	16.33	2.29
26	48.70	33.30	24.70	2.29
44	61.65	47.04	38.40	2.29
62	78.00	63.50	54.80	2.41

DIMENSIONS: ☐ mm [INCH] ☐ INCH [mm] ☒ mm ONLY

UNLESS OTHERWISE SPECIFIED, GENERAL TOLERANCE:
DECIMALS: X. ±0.38 [0.015]; .X ±0.25 [0.010]; .XX ±0.13 [0.005]
ANGLES: X° ±3°; .X° ±1.0°

MATERIAL:

FINISH:

CAD GENERATED DRAWING, DO NOT MANUALLY UPDATE

DRAWN BY AND DATE
JACK CHEN 2010-06-08

CHECKED BY AND DATE
JACK CHEN 2010-06-08

APPROVED BY AND DATE
FRANKY CHEN 2010-06-08

THIRD ANGLE PROJECTION

SCALE: 1 : 1 SIZE: A3

All Connectors
www.allconnectors.de info@allconnectors.de
Tel.: 0049 711 7098308 Fax: 0049 711 7098304
70794 Filderstadt Germany Kettemerstr. 25

TITLE
D-Sub Type Waterproof(High Density)

DRAWING NO. 231a-XX2X21 REV B

FILE NO.: SHEET 1 OF 1

THE INFORMATION CONTAINED IN THIS DOCUMENT IS PROPRIETARY TO Y-S ELECTRONIC, ANY REPORDUCTION IN PART OR WHOLE WITHOUT PRIOR WRITTEN APPROVAL OR AUTHORIZATION OF Y-S ELECTRONIC IS STRICTLY PROHIBITED.

REV.	DESCRIPTION	ECN NO.	DWN.	CHK.	APVD.	DATE

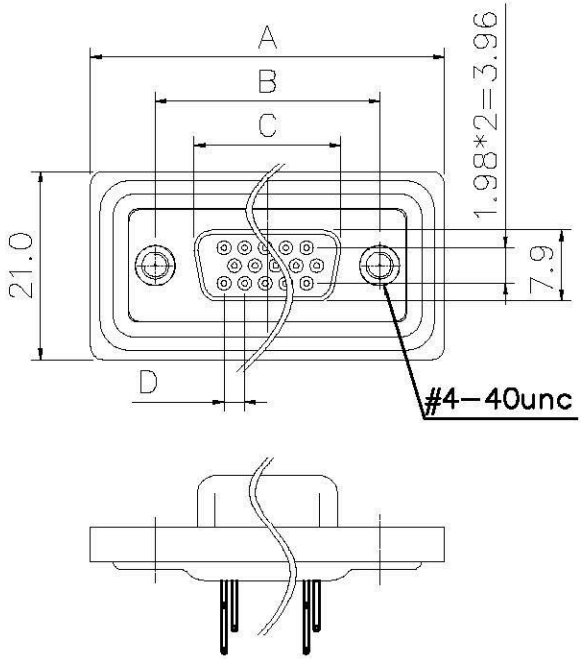

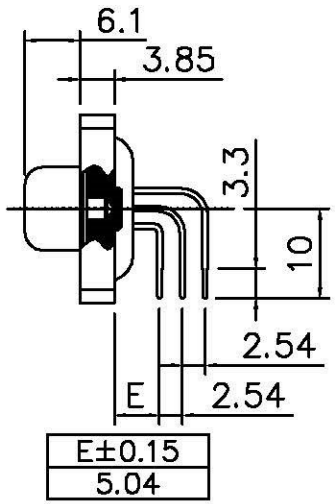

Product Specification
Insulator : Glass-Filled Thermoplastic PBT BLACK,UL94V-0
Contact : Brass
Shell : SPCC, Nickel Plated
Clinch Nut : Brass, Nickel Plated
Operating Temperature:-55℃ to +105℃

Electrical
Contact Resistance :
20 milliohms Max at 1 AMP DC.
Insulation Resistance :
1000 megohms at 500 VDC
Dielectric Withstanding Voltage :
1000 V RMS at 60Hz for 1 minute
Current Rating : 5 AMP
Volatge Rating : 250 V RMS at 60Hz

DO NOT SCALE DRAWING

Dimensions

POSITIONS	A±0.15	B±0.15	C±0.15	D±0.15
15	39.40	24.99	16.33	2.29
26	48.70	33.30	24.70	2.29
44	61.65	47.04	38.40	2.29
62	78.00	63.50	54.80	2.41

DIMENSIONS: ☐ mm [INCH] ☐ INCH [mm] ☒ mm ONLY
UNLESS OTHERWISE SPECIFIED, GENERAL TOLERANCE:
DECIMALS: X. ±0.38 [0.015]; .X ±0.25 [0.010]; .XX ±0.13 [0.005]
ANGLES: X° ±3°; .X° ±1.0°
MATERIAL:
FINISH:

CAD GENERATED DRAWING, DO NOT MANUALLY UPDATE
DRAWN BY AND DATE JACK CHEN 2010-06-08
CHECKED BY AND DATE JACK CHEN 2010-06-08
APPROVED BY AND DATE FRANKY CHEN 2010-06-08
THIRD ANGLE PROJECTION
SCALE: 1 : 1
SIZE: A3

AllConnectors
www.allconnectors.de
Tel.: 0049 711 2009504
70734 Filderstadt - Germany
info@allconnectors.de
Fax: 0049 711 7009504
Kettemerstr. 25

TITLE: D-Sub Type Waterproof(High Density)
DRAWING NO. 231a-XX2X31
REV B
FILE NO.:
SHEET 1 OF 1

THE INFORMATION CONTAINED IN THIS DOCUMENT IS PROPRIETARY TO Y-S ELECTRONIC, ANY REPORDUCTION IN PART OR WHOLE WITHOUT PRIOR WRITTEN APPROVAL OR AUTHORIZATION OF Y-S ELECTRONIC IS STRICTLY PROHIBITED.

REV.	DESCRIPTION	ECN NO.	DWN.	CHK.	APVD.	DATE

Ordering Information

231a - XX X X X X X X X
a b c d e f g h

a. No. of Pins

15: 15 Positions
26: 26 Positions
44: 44 Positions
62: 62 Positions

b. Contact Type:

1: Male
2: Female

c. Contact Plating:

0: Gold Flash Overall
1: 15u" Gold
2: 30u" Gold

d. Type

1: Solder Type
2: Dip Type
3: Right Angle Type

e. Screw Type

1: #4-40 UNC(Standard)
2: M3
3: M2.6

DIMENSIONS: ☐ mm [INCH] ☐ INCH [mm] ☒ mm ONLY

UNLESS OTHERWISE SPECIFIED, GENERAL TOLERANCE:

DECIMALS		ANGLES	
X.	±0.38 [0.015]	X°	±3°
.X	±0.25 [0.010]	.X°	±1.0°
.XX	±0.13 [0.005]		

MATERIAL:

FINISH:

CAD GENERATED DRAWING, DO NOT MANUALLY UPDATE

DRAWN BY AND DATE
JACK CHEN 2010-06-08

CHECKED BY AND DATE
JACK CHEN 2010-06-08

APPROVED BY AND DATE
FRANKY CHEN 2010-06-08

THIRD ANGLE PROJECTION

SCALE: 1 : 1

SIZE: A3

All Connectors
www.allconnectors.de info@allconnectors.de
Tel.: 0049 711 7000503 Fax: 0049 711 7000501
70794 Filderstadt - Germany Kattenacker 25

TITLE

D-Sub Type Waterproof(High Density)

DRAWING NO.

231a-XXXXX

REV B

FILE NO.:

SHEET 1 OF 1

DO NOT SCALE DRAWING