REV	MODIFICATION	DATE	DRAW
B	EN-05-1228	94/12/28	TERENCE

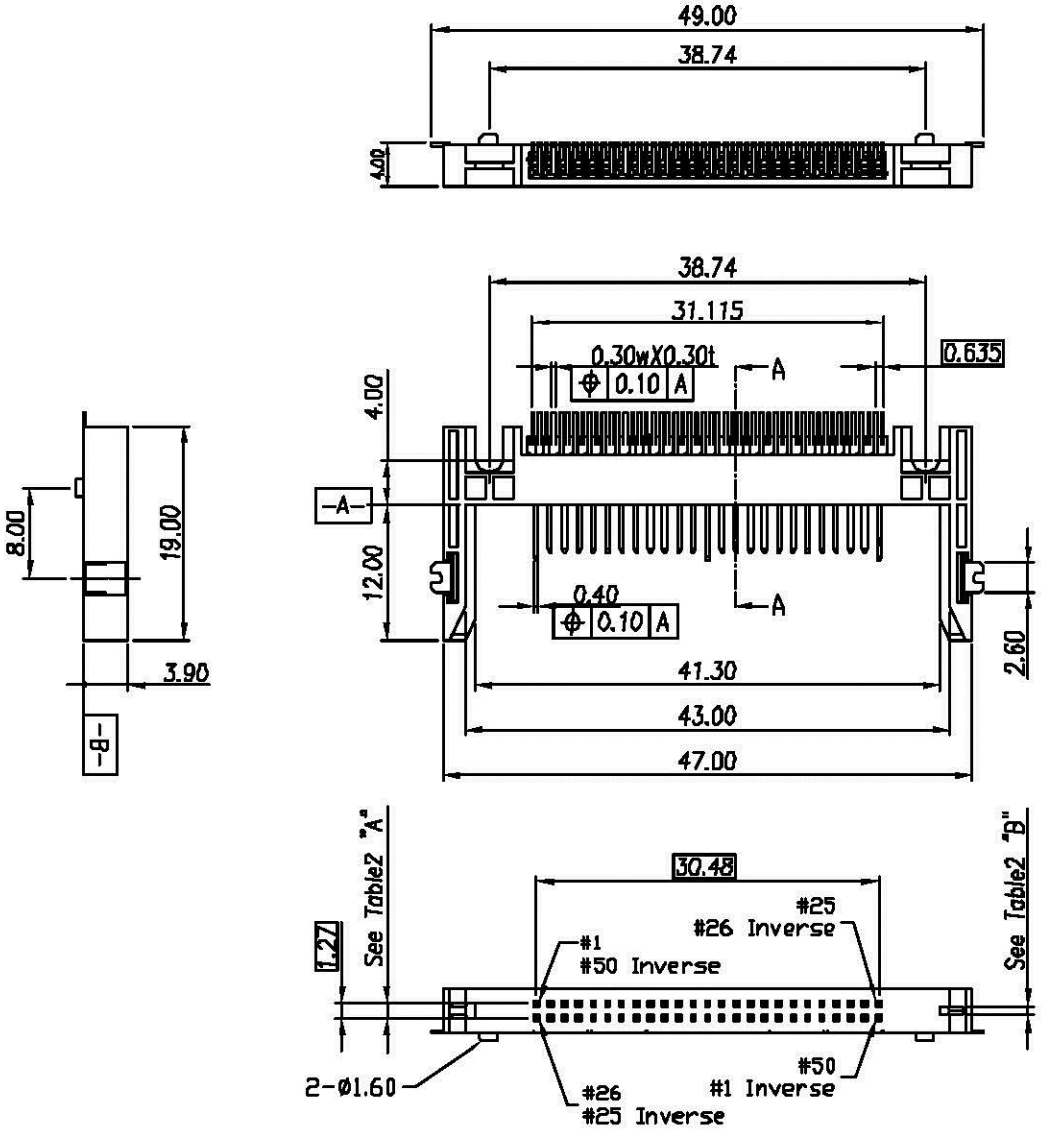

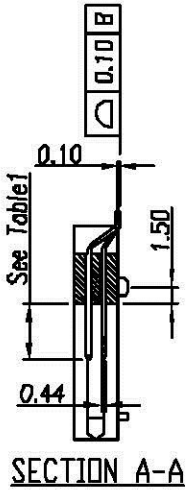

Table 1

Pin Type	Interface Dim.	Pin No.
Detect	3.50mm (0.138in)	25,26
General	4.25mm (0.167in)	The Others
Power	5.00mm (0.197in)	01,13,38,50

Table 2

Type \ DIM	A	B
Normal	1.40mm	0.79mm
Inverse	0.79mm	1.40mm

DIMENSION IN mm [inch]		PROD. SPEC.
TOLERANCE UNLESS OTHERWISE SPECIFIED		PKG. SPEC.
.X±0.30	X.°± 1°	APPROVE
.XX±0.20	.X°± 0.5°	CHECK
.XXX±0.10	.XX°± 0.25°	DRAW

AllConnectors

TITLE CF CARD CONN. SLIM TYPE — CUSTOMER DRAWING

FILE NO. — DWG NO. CFZMD-65TXXWX00

SIZE A4 — PROJ. — SHEET 1 / 2

SCALE 1.5:1 — REV B

8F-01-R10