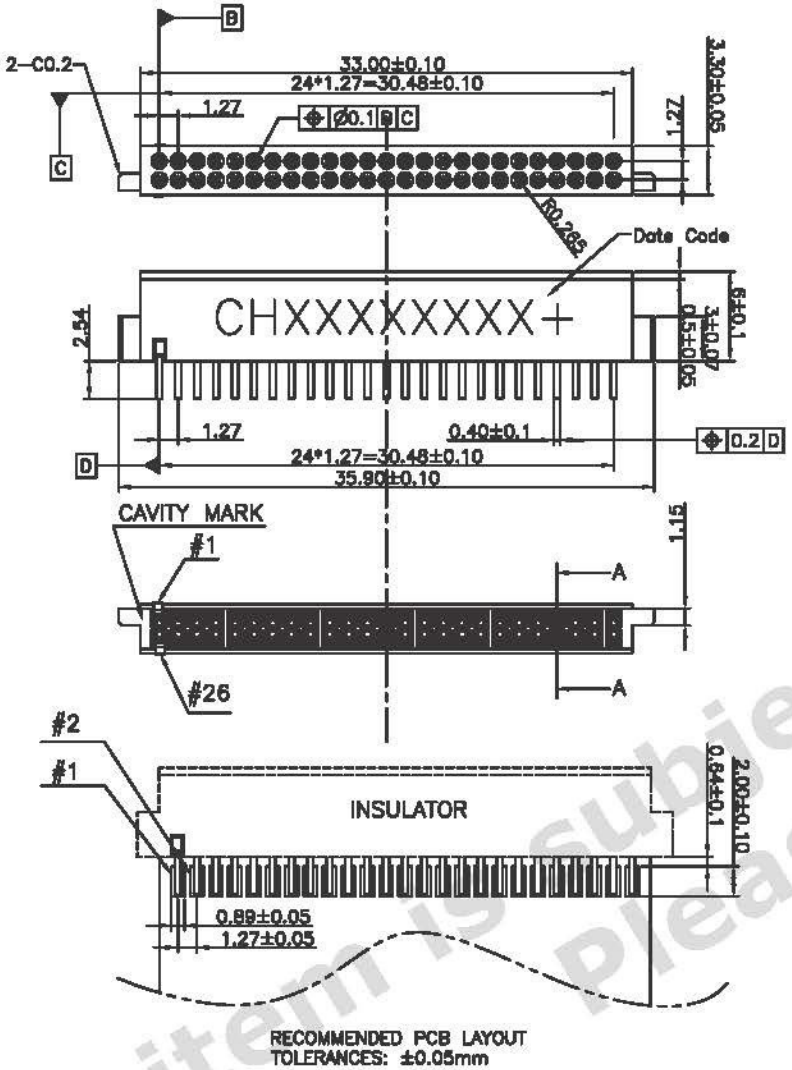

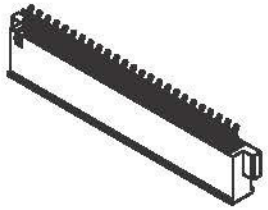

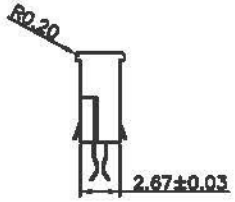

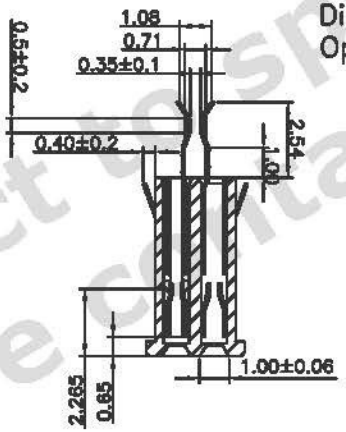

A-A(SCALE 2:1)

MATERIAL
Insulator: Thermal Plastic UL94V-0 Color:Black
Contacts: Copper Alloy
CONTACT PLATING
Underplate: 50u" Nickel
Contact Area: 15u" Selective Gold
Solder Tails Area: 100u" Tin/Lead Free(Matte Tin)
Contact Number: 50 Pin
ELECTRICAL
Operation voltage: 100V AC max.
Current rating: 0.5 Amps max.
contact resistance: 40 mohms max.
Insulation resistance: 1000 Mohms min @ 500 VDC
Dielectric withstanding voltage: 500 VAC/minute
Operating temperature: -10°C To +70°C

PRODUCT NUMBER:
101H-S A A A-R
1 2 3 4

1.Type
S:Straddle

2.Contact Plating
A:15u"Gold Plating

3.Grounding
A:w/o Grounding

4.RoHS

This item is subject to special conditions
Please contact us

REV.	DESCRIPTION	DATE	REV.	DESCRIPTION	DATE
3	Revise:				
2	Revise:				
1	Revise:				

UNLESS OTHERWISE SPECIFIED TOLERANCE		
ANGLES	ANG.	±5°
LINEAR	0.	±0.3
	0.0	±0.25
	0.00	±0.20
SCALE	AS SHOWED	UNIT: mm
DRAWN	Willis	2012/08/03
CHECKED	Angel	2012/08/03
APPROVED	Ken	2012/08/03

All Connectors
www.allconnectors.de info@allconnectors.de
Tel.:0049 711 300601 Fax: 0049 711 300604
70734 Filderstadt - Germany Kernenerstr. 25

DRAWN NAME:	CF Female Connector Straddle Type W/O Grounding
PRODUCT NO.	101H-SAAA-R
SIZE A4	REV. 1.0
FILE NAME	101H-SAAA-R_B_2