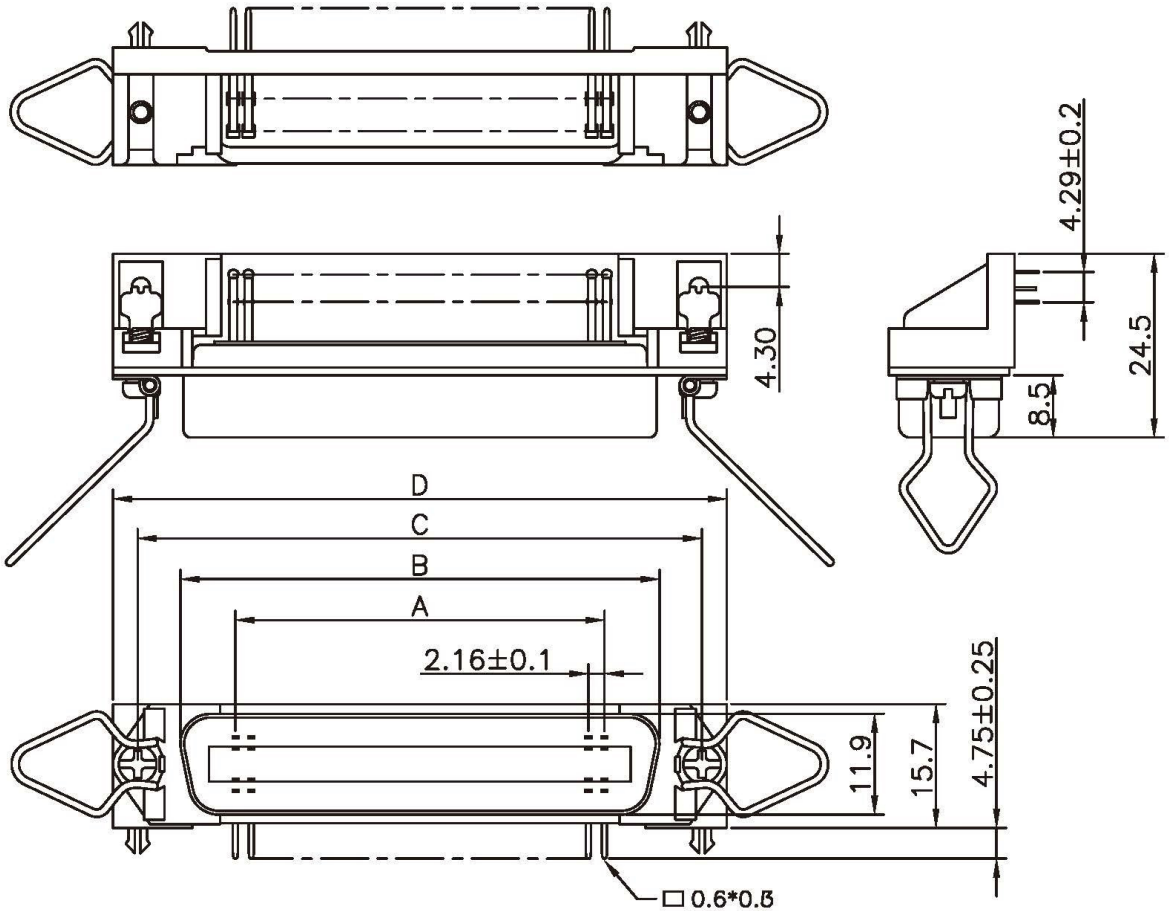

Material & finish

SHELL:
Steel
Zinc plated, Tin plated
or Nickel plated steel

PIN CONTACT:
Phosphor Bronze
Gold plated

INSULATOR:
PBT & Glass–fibre reinforced
UL–94–V0

CURRENT RATING:
1 Amp

DIELECTRIC STRENGTH:
1000V for one minute

INSULATOR RESISTANCE:
1000MΩ Min. (at 500V DC)

TEMPERATURE:
–55° C to +105° C

Positions	A	B	C	D
14	12.96	25.2	36.0	43.9
24	23.76	36.0	46.8	54.7
36	36.72	48.9	59.7	67.7
50	51.84	64.1	74.9	82.8

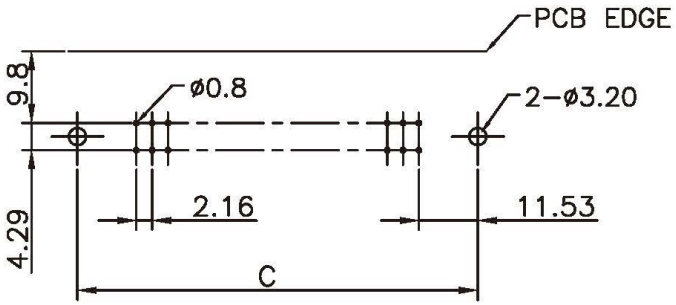

P.C.B. LAYOUT

RoHS Compliant

AllConnectors
www.allconnectors.de
info@allconnectors.de
Tel.: 0049 711 7009503
Fax: 0049 711 7009504
70794 Filderstadt - Germany
Kettemerstr. 25

DRAWING BY	CY
CHECKED BY	GENIUS
UNIT / mm	SCALE 1 : 1
DATE	
SIZE A4	PPOJECTION

TOLERANCES ARE
X. ±
.X ± 0.20
.XX ± 0.10
.XXX ±
ANG ±

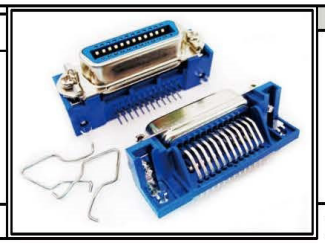

ORDER INFORMATION

CR-SZ-xx-LF
SERIES
CLIP
FEMALE
14~50WAY
LEADFREE

DESCRIPTION: **57 P.C.B. RIGHT ANGLE FEMALE WITH SPRING LATCH SCREW LOCK Z SHAPE**