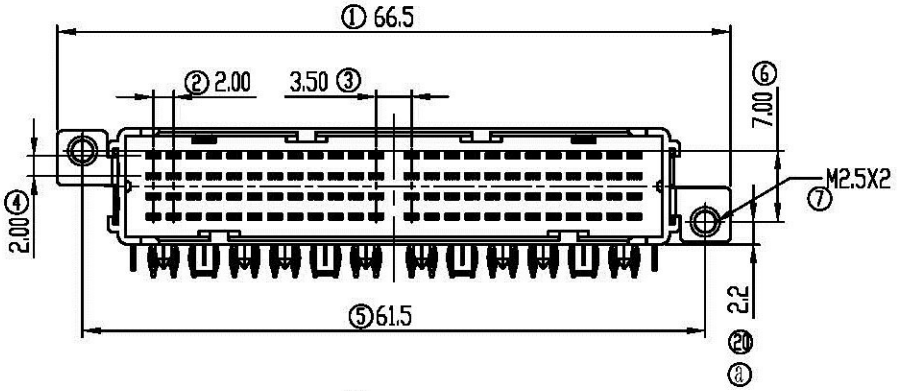

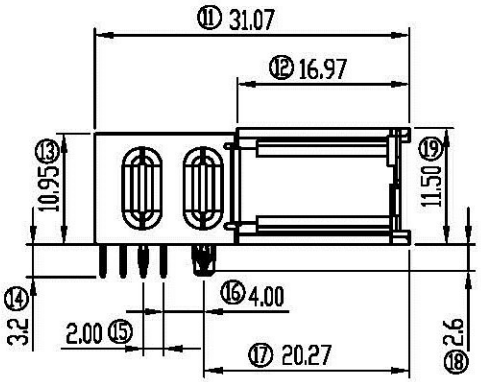

Performance characteristics:

1. Main body part material
   Insulator: LCP NATURE UL94V-0
   Press block: LCP NATURE UL94V-0
   Terminal: Phosphor bronze ,plating see spec list
   Shell: SUS304
2. Electrical requirements:
   Current rating: 1A
   Contact resistance: ≤50 mΩ
   ⓐ Insulation resistance: ≥500 MΩ
   Withstanding voltage: 1000 Vr.m.s, 1mA, 60s
3. Environment specification
   Working temperature: -55℃~+125℃
4. Applicable standard: IEC61076-4-104
5. Packing & storing
   Method of packing: tray, inner box, outer box
   Storing condition: temperature of -10℃~+40℃
   below 80% relative humidity
6. Style of installation: press-fit pcb installation
7. To prevent the pollution of the environment product info RoHS agreement: In line with the european union RoHS

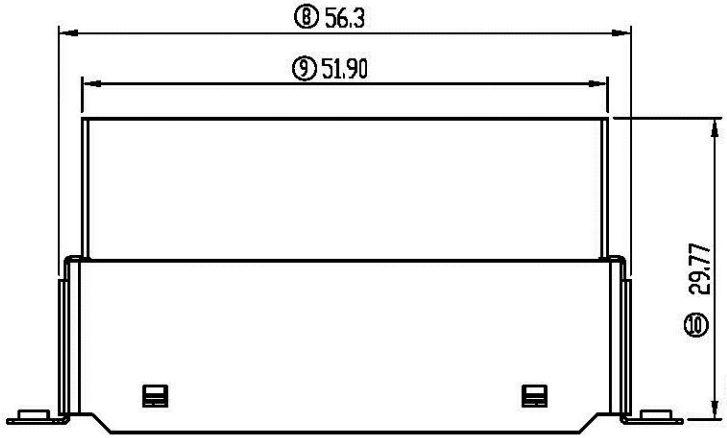

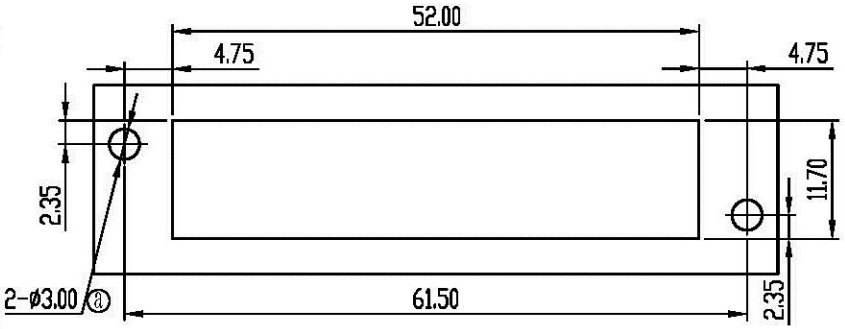

Recommended Frontpanel Cutout dimensions

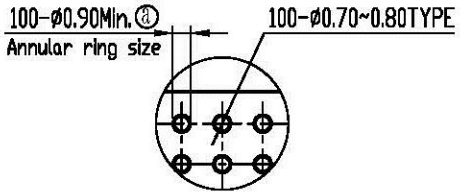

detail A
scale 2:1

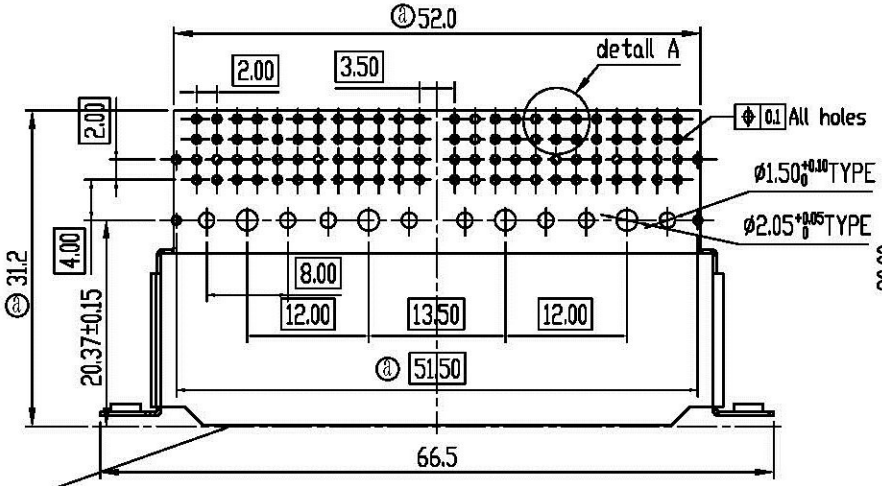

Mounting hole position is referenced to the Front of frontpanel

Recommended PCB Layout thickness:2.00±0.05

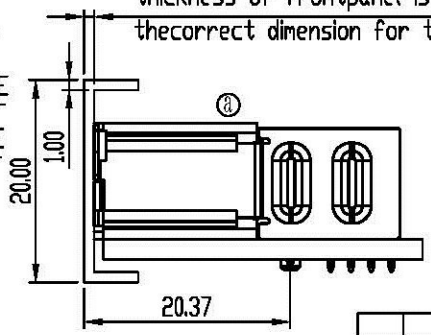

1809 - 424 - 0 X - N

Series code

Teminal number	
Code	Definition
424	4*24

Spec code	
Code	Definition
0	standard type

Plating code		
Code	Definition	
	Contact area	Tail
7	Au 0.38 μm	Sn
8	Au 0.76 μm	
E	PdNi 0.38 μm+Gold Flash	
F	PdNi 0.76 μm+Gold Flash	

Insulator material & color	
Code	Definition
N	LCP Nature UL94V-0

Unless otherwise specified tolerance:

X.	±0.50	X.°	±3°
.X	±0.38	.X°	±2°
.XX	±0.25		

Mark	NO.	File NO.	Signature	Date
	8	SN-00002017	Lawrence	2012.07.09
DRAW		Lawrence 2012.06.12		
CHK				
MAN		Alan2012.7.13		
STD		Cindy2012.7.13		
APP		ZhiJian Jiang2012.7.13		

2.00mm 4*24 male Right angle Press fit CONN.

1809-424-0X-N

SL0.1809.101

Projection	Rev.	Weight	Scale
	A1		

All Dimensions in mm | Sheet 1 of 1

All Connectors
www.allconnectors.de
Tel.: 0049 711 7029528
70794 Filderstadt - Germany
info@allconnectors.de
Fax: 0049 711 7029504
Leitenwiesen 25