REV.	DESCRIPTION	ECN NO.	DATE	DRAWER
B	Modified by Customer Design	DECN060305	03/14/2006	Edsen
C	Modified by Customer Design	EC0703014	03/06/2007	Jeff
D	Added Type △D X 2	EC1008068	08/27/2010	Neal

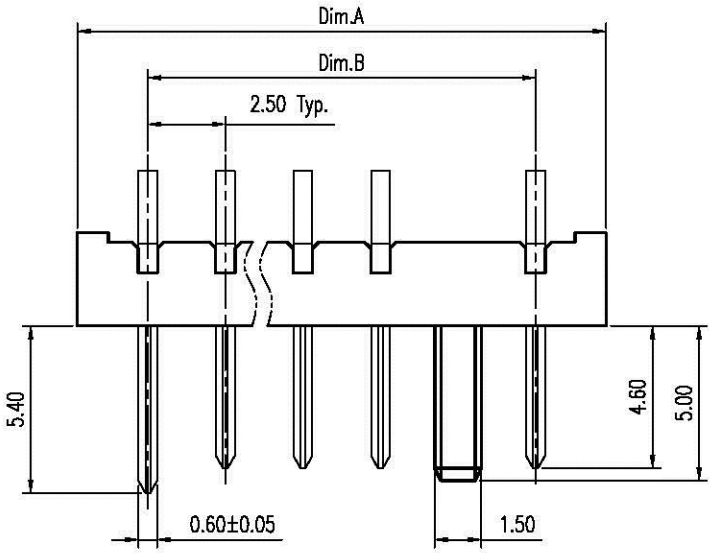

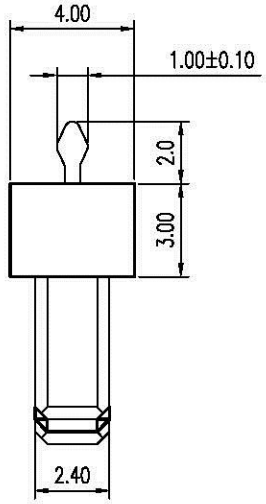

Notes:

1. Material :
   Housing : Thermoplastic UL 94V-0 ,Black
   Terminal : Copper Alloy
2. Finish :
   Terminal : Selected Gold on Contact Area,
   Gold Flash on Solder Tails, Both
   Over 50u" Min. Nickel Under-plated Overall
3. Order Information :
   T SB1-052 X 1-06T X

T: RoHS (for High Temperature)

△D Amount of Pins
3 : 3 Pins
s
9 : 9 Pins

Plating
2 : 2u" Min. Gold on Contact Area
3 : 5u" Min. Gold on Contact Area
8 : 30u" Min. Gold on Contact Area

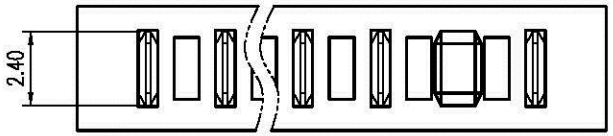

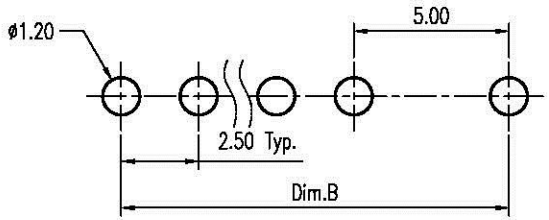

Recommended P.C.B. Layout
Layout Tolerance = ± 0.05 mm

Dimension Information:

Part No. \ Dim.	Amount of Pins	Dim.A	Dim.B
△D TSB1-05231-06TX	3	12.05	7.50
TSB1-05241-06TX	4	14.55	10.00
TSB1-05251-06TX	5	17.05	12.50
TSB1-05261-06TX	6	19.55	15.00
TSB1-05271-06TX	7	22.05	17.50
TSB1-05281-06TX	8	24.55	20.00
TSB1-05291-06TX	9	27.05	22.50

DIMENSION IN mm [inch]			
Tolerance unless otherwise specified			
X. ± --	X.° ± 10°		
X.X ± 0.38	X.X° ± 5°		
X.XX ± 0.25	X.XX° ± 2°		
X.XXX ± 0.13	X.XXX° ±		

All Connectors
www.allconnectors.de
Tel.: 0049 711 7009308
70734 Fildenstadt - Germany
info@allconnectors.de
Fax: 0049 711 7009304
Kettemerstr. 25

CUSTOMER DRAWING

Title: 2.5mm Pitch Battery Conn. Male Type
Dwg No. TSB1-052X1-06TX
File No. P03015
Scale: 4 : 1
Size: A 4
Rev : D
Sheet: 1 / 1

Approver:
Checker:
Drawer: Neal 08/27/2010

WC00-4B